Hitachi Power Tools

LIST NO. G834

ELECTRIC TOOL PARTS LIST

■ CORDLESS KIT

2005 · 8 · 1

Model KC 14DVF

(E1)

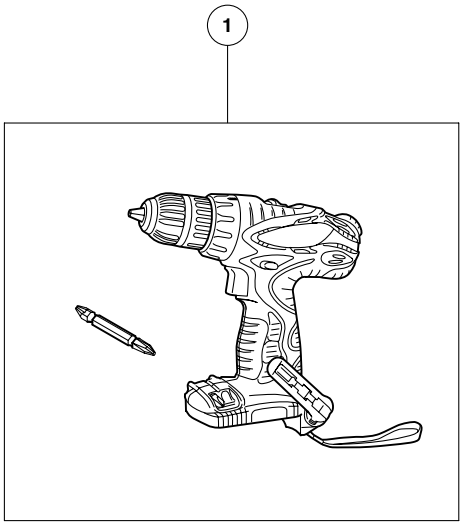

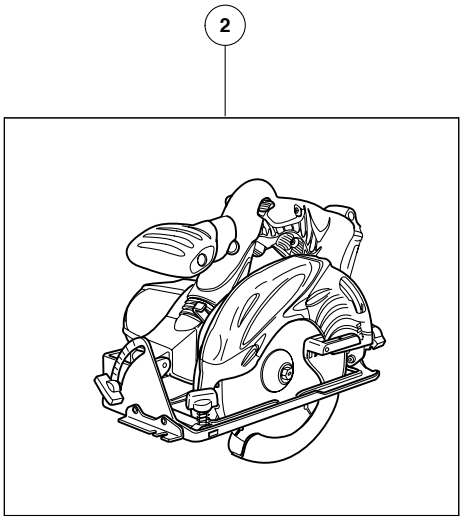

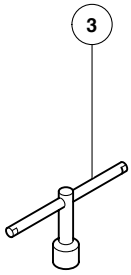

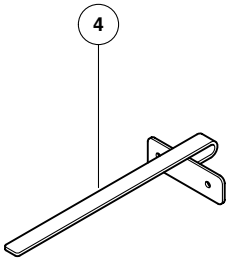

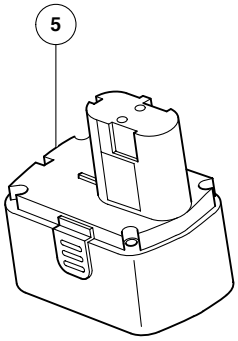

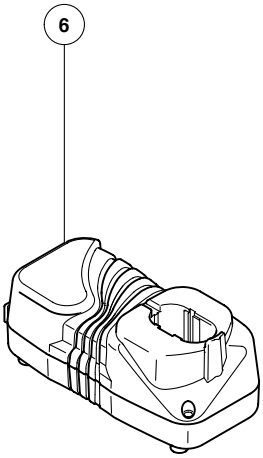

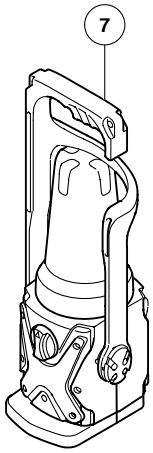

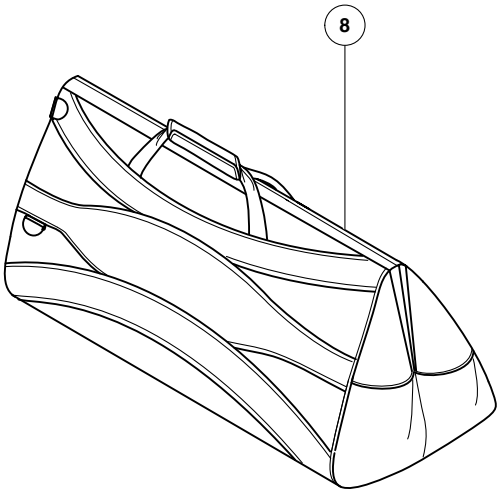

ITEM NO.	CODE NO.	DESCRIPTION	NO. USED	REMARKS	
1		MODEL DS 14DVF3 CORDLESS DRIVER DRILL	1		
2		MODEL C 14DMR CORDLESS CIRCULAR SAW	1		
3	940-543	BOX WRENCH 10MM	1		
4	302-756	GUIDE	1		
5	324-367	BATTERY EB 1414S (W/ENGLISH N.P)	2		
6		MODEL UC 18YG CHARGER	1		
7		MODEL UB 18DL CORDLESS LANTERN	1		
8	324-902	BAG	1		

* ALTERNATIVE PARTS

Printed in Japan 8 – 05
(050801N)